Specialized Equipment
for Specialty Healthcare

**Medical Technology Industries**

# 830

## & 829 user manual

SCAN THE QR CODE TO THE LEFT
TO ACCESS SETUP AND OPERATION
VIDEOS AND RESOURCES FOR THE
830 AND 829 SERIES CHAIRS

# Table of Contents


APPLICABLE MODEL(S) ..... IV
REVISION HISTORY TABLE ..... IV
GENERAL INFORMATION ..... 1
- Purpose of this Manual ..... 1
- Intended Use ..... 1
- Training Options ..... 1
- Symbols and Warnings ..... 2
- Safety Instructions ..... 4
- Electromagnetic Interference ..... 5
- Electromagnetic Compatibility (EMC) ..... 5
- Electrical Requirements ..... 8
- Contraindications ..... 9
- Transportation and Storage Conditions ..... 9
- Disposal of Equipment ..... 9

EQUIPMENT FEATURES ..... 10
INSTALLATION ..... 12
- Required Tools ..... 12
- Explanation of Instructions ..... 12
- Unpacking and Set-up ..... 13

OPERATION ..... 14
- Operating Conditions ..... 14
- SmartTech™ ..... 14
- Smart Controller™ Technology ..... 14
- User Program Mode ..... 14
- Hibernation State ..... 15
- Smart Safety™ Technology ..... 15
- Safety Lockout ..... 15
- Controls ..... 16
- Headrest Operation ..... 18
- Swivel Base Operation ..... 19
- Mobile Base Operation ..... 19

LIST OF ACCESSORIES ..... 21
MAINTENANCE ..... 24
- Disinfection ..... 24
- Cleaning ..... 25
- Preventative Maintenance ..... 25
- Power Cord Removal Instructions ..... 25
- Fuse Replacement Instructions ..... 25
- Calls for Service ..... 25

LIMITED WARRANTY ..... 26
TROUBLESHOOTING GUIDE ..... 27
GUIDE TO INDICATOR LIGHTS AND SOUNDS ..... 29
SPECIFICATIONS ..... 31
IN-SERVICE FORM ..... 33

# APPLICABLE MODEL(S)

This manual is for the following product numbers and serial numbers:

| PRODUCT NUMBER | DESCRIPTION | EFFECTIVE S/N |
|---|---|---|
| 830-001-XX | 830 Procedure Chair, Std Base, 100-240V | 181016-XXXX to Current |
| 830-002-XX | 830 Procedure Chair, Swivel Base, 100-240V | 181016-XXXX to Current |
| 830-003-XX | 830 Procedure Chair, Mobile Base, 100-240V | 181016-XXXX to Current |
| 829-001-XX | 829 Procedure Chair, Std Base, 100-240V | 181016-XXXX to Current |
| 829-002-XX | 829 Procedure Chair, Swivel Base, 100-240V | 181016-XXXX to Current |
| 829-003-XX | 829 Procedure Chair, Mobile Base, 100-240V | 181016-XXXX to Current |

# REVISION HISTORY TABLE

| DATE | REVISION | CO#/ECO# | DETAILS |
|---|---|---|---|
| 10/17/2018 | A | CO-0166 | Initial release |
| 10/25/2018 | B | CO-0208 | Graphical Updates, typographical corrections, Corrected IP Rating, Updated Unpacking & Setup Section. |
| 6/16/2020 | C | CO-0255 | Spelling corrections. |
| 1/24/2020 | D | CO-0368 | Modified In-service form, changed logo, corrected text. Added QR code. |

# User Manual

## MTI 830 & 829

## GENERAL INFORMATION

### Purpose of this Manual

This manual covers the safety, installation, instructions for use, and maintenance of this equipment. It is intended that it be used by the service professional installing the equipment and by the medical professionals who have been trained to use it. No repair information is included with this manual because no operator repairs are intended.

### Intended Use

This equipment is intended to be used as a chair/table for general examinations and procedures performed by a qualified medical professional in a medical office environment.

### Training Options

Training is based on the intended use of the equipment and the proficiency of the medical professionals who will be using the equipment. Training is accomplished either through reading the installation and operation sections of the user manual or through remote training provided by MTI Techical Support. To request training, contact MTI.

## PRODUCT INFORMATION

Date of Purchase:_____

Model Number:_____

Serial Number:_____

*(see "EQUIPMENT FEATURES" on page 10 for location of serial number label)*

## Symbols and Warnings

This manual contains Notices, Cautions, and Warnings, which are meant to call attention to particular parts or sections of this manual. Since safety is of our utmost concern, this manual should be read by all personnel who will be operating this medical equipment.

## Symboles et Avertissements

Ce manuel contient des avis, des précautions et des avertissements qui sont destinés à attirer l'attention sur des pièces ou des sections de ce manuel particulier. Parce que la sécurité est notre première préoccupation, ce manuel doit être lu par tout le personnel qui sera d'utiliser cet équipement médical.

### ⚠ WARNINGS/AVERTISSEMENTS

*Are used to call attention to condition, practice, or procedure, which could cause personal injury if not followed correctly. Please become familiar with all warnings and observe them at all times.*

*Sont utilisés pour attirer l'attention sur une condition, pratique ou procédure qui pourrait causer des blessures s'il n'est pas suivi correctement. S'il vous plaît se familiariser avec tous les avertissements et les observer à tout moment.*

### ⚠ CAUTIONS/PRÉCAUTIONS

*Are used to call attention to a condition, practice, or procedure which could cause product damage if not used correctly.*

*Sont utilisés pour attirer l'attention sur une condition, pratique ou procédure qui pourrait causer des dommages au produit s'il n'est pas utilisé correctement.*

### ! NOTICES/AVIS

*Are used to call attention to helpful information regarding a condition, practice, or procedure.*

*Sont utilisés pour attirer l'attention sur des informations utiles concernant une condition, pratique ou de procédure.*

| | |
|---|---|
| | *Type B applied part*<br>*Type B, partie appliquée* |
| | *Proper shipping orientation for the product*<br>*Orientation d'embarquement correct pour le produit* |
| | *Product is fragile; be careful in handling*<br>*Le produit est fragile. Soyez prudent lors de la manipulation* |
| | *Protective earth ground*<br>*Terre électrique de protection* |
| | *Alternating current*<br>*Le courant alternatif* |
| | *Product must be kept dry*<br>*Le produit doit rester sèche* |
| | *Upper and lower limits of temperature*<br>*Limites haute et basse de la température* |
| 3 | *Maximum stacking height of palletized units.*<br>*Hauteur maximale de la pile d'unités sur palettes.* |
| | *Indicates the presence of a dangerous voltage/shock hazard*<br>*Indique le présence de voltage dangereux/ de choc* |
| | *Follow instructions for use*<br>*Suivez les instructions pour l'utilisation* |
| | *Consult operating instructions*<br>*Consultez les instructions d'utilisation* |
| | *Manufacturer of product*<br>*Fabricant de produits* |
| | *Date on which the product was manufactured*<br>*Date de fabrication* |
| SN | *Identifies the manufacturer's serial number*<br>*Identifie le numéro de série du fabricant* |

| | |
|---|---|
| | *Upper and lower limits of relative humidity*<br>*Limites haute et basse de humidité relative* |
| | *Upper and lower limits of atmospheric pressure*<br>*Limites haute et basse de la pression atmosphérique* |
| | *Location of fuses*<br>*Emplacement de fusibles* |
| N | *Connection point for the neutral conductor*<br>*Point de connexion pour le conducteur neutre* |
| L | *Connection point for the live conductor*<br>*Point de connexion pour le conducteur sous tension* |
| G | *Connection point for the protective earth (ground) conductor*<br>*Point de connexion pour le conducteur de protection (fil de masse)* |
| | *(WEEE) Waste of Electrical and Electronic Equipment*<br>*Déchets d'équipements électriques et électroniques* |
| ETL CLASSIFIED C ETL US Intertek | *ETL listing mark*<br>*Marque ETL Listé* |
| C UL US LISTED | *UL listing mark*<br>*Marque UL Listé* |
| CE | *European Conformity mark*<br>*Marque Conformité Européenne* |
| RoHS | *RoHS Compliant*<br>*Conforme à RoHS* |
| | *Hospital Grade (green dot)*<br>*De qualité hôpital (point vert)* |
| | *TUV listing mark*<br>*Marque TUV Listé* |
| | *Emergency Stop*<br>*Arrêt d'urgence* |

| | |
|---|---|
| | *Steering Mode (green)*<br>*Mode de Direction (vert)* |
| | *Free Mode (yellow)*<br>*Mode Libre (jaune)* |
| | *Locked Mode (red)*<br>*Mode verrouillé (rouge)* |

## Safety Instructions

⚠ WARNING/AVERTISSEMENT

*Read this manual before installation and use.*

*Lisez ce manuel avant l'installation et l'utilisation.*

⚠ WARNING/AVERTISSEMENT

*No modification of this equipment is allowed.*

*Aucune modification de cet équipement est autorisé.*

⚠ WARNING/AVERTISSEMENT

*Do not operate equipment in the presence of flammable anesthetics.*

*Ne pas faire fonctionner l'équipement en présence d'anesthésiques inflammables.*

⚠ WARNING/AVERTISSEMENT

*Do not leave the equipment unattended during use of programmable buttons (Home/P1-P4) or manual actuation of a function.*

*Ne laissez pas l'appareil sans surveillance pendant l'utilisation des positions programmées (position retournée/P1-P4) ou l'actionnement manuel d'une fonction.*

⚠ WARNING/AVERTISSEMENT

*Ensure equipment, patient, and other objects are in a safe condition before operating the equipment.*

*Assurer l'appareil, patient, et d'autre objets sont dans un état sûr avant d'utiliser l'appareil.*

⚠ WARNING/AVERTISSEMENT

*Verify patient arms, headrest and other adjustable equipment features and accessories are locked and in a safe and secure position before use.*

*Vérifiez que les accoudoirs, l'appui-tête et les autres éléments et accessoires de l'équipement ajustable sont verrouillés et dans une position sûre avant toute utilisation.*

⚠ WARNING/AVERTISSEMENT

*Ensure controls, cords, and other parts of the equipment do not create a tripping or other safety hazard for operator or patient.*

*Vérifiez les contrôles, les cordons et les autres parties de l'équipement ne créent pas un risque de trébuchement ou d'autres risques d'accident pour l'opérateur ou le patient.*

⚠ WARNING/AVERTISSEMENT

*Activate the Safety Lockout setting or the power button (only on select models) to prevent unintentional equipment movements caused by electromagnetic interference, radio frequency interference from other equipment or from accidental activation of the equipment controls. Failure to do so may result in personal injury. Activating the Safety Lockout setting or the power button (only on select models) will not prevent non-powered motion.*

*Activez le paramètre Verrouillage de Sécurité ou le bouton d'alimentation (uniquement sur certains modèles) pour éviter les mouvements involontaires de l'équipement causés par des interférences électromagnétiques, des interférences radio provenant d'un autre équipement ou une activation accidentelle des commandes de l'équipement. Ne pas le faire peut entraîner des blessures corporelles. L'activation du réglage de verrouillage de sécurité ou du bouton d'alimentation (uniquement sur certains modèles) n'empêche pas les mouvements non motorisés.*

⚠ WARNING/AVERTISSEMENT

*Exceeding the specified load limit of any equipment component may result in personal injury or property damage. See "Specifications" on page 31.*

*Le dépassement de la limite de poids spécifiée de tout composant de l'équipement peut entraîner des blessures ou des dommages matériels. Voir «Specifications» à la page 31.*

⚠ WARNING/AVERTISSEMENT

*Backrest, seat, footrest, armrest, headrest, and other parts of the equipment should only be used for their intended purpose. MTI is not responsible for use of components outside of their intended use.*

*Le repose-dos, reste de siège, repose pieds, accoudoirs, appuie-tête et d'autres parties de l'équipement ne doivent être utilisés conformément à leur utilisation prévue. MTI n'est pas responsable de l'utilisation des composants au dehors de leur utilisation prévue.*

⚠ WARNING/AVERTISSEMENT

*For chairs equipped with a mobile base, lower the lift of the chair sufficiently to prevent instability during transport.*

*Pour les chaises équipés d'une base mobile, abaissez suffisamment l'élévateur de la chaise pour éviter toute instabilité pendant le transport.*

⚠ WARNING/AVERTISSEMENT

*This product can expose you to chemicals including nickel, which is known to the State of California to cause cancer. For more information go to www.P65Warnings.ca.gov and see www.mti.net/faqs for details on California Proposition 65.*

*Ce produit peut vous exposer à des agents chimiques, y compris le nickel, identifiés par l'État de Californie comme pouvant causer le cancer. Pour de plus d'informations, prière de consulter www.P65Warnings.ca.gov et voir www.mti.net/faqs pour les détails sur le Proposition de Californie 65.*

## Electromagnetic Interference

This equipment is designed and built to minimize electromagnetic interference with other devices. However, if interference is noticed between another device and this equipment, do one or more of the following:

1. Ensure other device is operating within its specifications.
2. Plug equipment into isolated circuit.
3. Remove interfering device from room.
4. Increase separation between equipment and interfering device.
5. Contact MTI if electromagnetic interference persists.

## Electromagnetic Compatibility (EMC)

⚠ WARNING/AVERTISSEMENT

*Use of accessories, transducers and cables other than those specified or provided by the manufacturer of this equipment could result in increased electromagnetic emissions or decreased electromagnetic immunity of this equipment and result in improper operation.*

*L'utilisation d'accessoires, de transducteurs et de câbles autres que ceux spécifiés ou fournis par le fabricant de cet équipement peut induire une augmentation des émissions électromagnétiques ou une diminution de l'immunité électromagnétique de cet équipement et entraîner un mauvais fonctionnement.*

⚠ WARNING/AVERTISSEMENT

*During use, portable RF communications equipment (including peripherals such as antenna cables and external antennas) should be used no closer than 30 cm (12 inches) to any part of the chair, including cables specified by the manufacturer. Otherwise, degradation of the performance of this equipment could result.*

*Les équipements de communication RF portables (y compris les périphériques tels que les câbles d'antenne et les antennes externes) ne doivent pas être utilisés à moins de 30 cm (12 po) de toute partie de la chaise, y compris les câbles spécifiés par le fabricant, pour éviter tout risque de dégradation des performances de cet équipement.*

⚠ WARNING/AVERTISSEMENT

*Use of this equipment adjacent to other electrical equipment should be avoided since it could result in improper operation. If such use is necessary, verify normal chair operation before use with patients.*

*L'utilisation de cet équipement à proximité d'autres équipements électriques doit être évitée car cela pourrait entraîner un mauvais fonctionnement. Si une telle utilisation est nécessaire, vérifier le fonctionnement normal du fauteuil avant de l'utiliser avec les patients.*

! NOTICE/AVIS

*The emissions characteristics of this equipment make it suitable for use in industrial areas and hospitals (CISPR 11 class A). If it is used in a residential environment (for which CISPR 11 class B is normally required) this equipment might not offer adequate protection to radio-frequency communication services. The user might need to take mitigation measures, such as relocating or re-orienting the equipment.*

*Les caractéristiques d'émission de cet équipement le rendent approprié pour une utilisation dans les zones industrielles et les hôpitaux (CISPR 11 classe A). S'il est utilisé dans un environnement résidentiel (pour lequel la norme CISPR 11 de classe B est normalement requise), cet équipement peut ne pas offrir une protection adéquate aux services de communication radiofréquence. L'utilisateur peut avoir besoin de prendre des mesures d'atténuation, telles que le déplacement ou la réorientation de l'équipement.*

This chair has been tested to comply with the requirements of EN 60601-1-2:2014 Ed.4 for electromagnetic compatibility (EMC). The chair was designed to be operated within the electromagnetic environment specified below.

| Guidance and manufacturer's declaration - electromagnetic emissions | | |
|---|---|---|
| Emissions Test | Compliance | Electromagnetic Environment - Guidance |
| RF emissions CISPR 11 | Group 1 | The 830 & 829 Procedure Chairs use RF energy only for its internal function. Therefore, its RF emissions are very low and are not likely to cause any interference in nearby electronic equipment. |
| RF emissions CISPR 11 | Class A | The 839 & 829 MTI Procedure Chairs are suitable for use in all establishments other than domestic and those directly connected to public low-voltage power supply network that supplies buildings used for domestic purposes. |
| Harmonic Emissions IEC 6100-3-2 | Class A | |
| Voltage fluctuations/flicker emissions IEC 61000-3-3 | Complies | |

| RECOMMENDED SEPARATION DISTANCES BETWEEN PORTABLE AND MOBILE RF COMMUNICATIONS EQUIPMENT AND THE MTI PROCEDURE CHAIRS | | | |
|---|---|---|---|
| The MTI Procedure Chair is intended for use in an electromagnetic environment in which radiated RF disturbances are controlled. The customer or the user of the MTI Procedure Chair can help prevent electromagnetic interference by maintaining a minimum distance between portable and mobile RF communications equipment (transmitters) and the MTI Procedure Chair as recommended below, according to the maximum output power of the communications equipment. | | | |
| Rated maximum output power of transmitter<br>Watts (W) | Separation distances according to frequency of transmitter<br>meters (m) | | |
| | 150 kHz to 80 MHz<br>d = (1.17)(√P) | 80 MHz to 800 MHz<br>d = (1.17)(√P) | 800 MHz to 2.5 GHz<br>d = (2.33)(√P) |
| 0.01 | 0.12 | 0.12 | 0.23 |
| .1 | 0.37 | 0.37 | 0.74 |
| 1 | 1.17 | 1.17 | 2.33 |
| 10 | 3.69 | 3.69 | 7.38 |
| 100 | 11.70 | 11.70 | 23.30 |
| For transmitters rated at a maximum output power not listed above, the recommended separation distance d in meters (m) can be estimated using the equation applicable to the frequency of the transmitter, where P is the maximum output power rating of the transmitter in watts (W) according to the transmitter manufacturer.<br>NOTE 1: At 80 MHz and 800 MHz, the separation distance for the higher frequency range applies.<br>NOTE 2: These guidelines may not apply in all situations. Electromagnetic propagation is affected by absorption and reflection from structures, objects and people. | | | |

| GUIDANCE AND MANUFACTURER'S DECLARATION - ELECTROMAGNETIC IMMUNITY | | | |
|---|---|---|---|
| The MTI Procedure Chair is intended for use in the electromagnetic environment specified below. The customer or the user of the MTI Procedure Chair should assure that it is used in such an environment. | | | |
| Immunity Test | IEC 60601 Test Level | Compliance Level | Electromagnetic Environment Guidance |
| Conducted RF<br>IEC 61000-4-6<br><br>Radiated RF<br>IEC 61000-4-3 | 3V rms<br>150kHz to 80 MHz<br><br>3V/m<br>80MHz to 2.7 Ghz | 3V<br><br>3V/m | Portable and mobile RF communications equipment should be used no closer to any part of the MTI Procedure Chair, including cables, than the recommended separation distance calculated from the equation applicable to the frequency of the transmitter.<br>Recommended separation distance:<br>d = (1.17)(√P) 150 kHz to 80 MHz<br>d = (1.17)(√P) 80 MHz to 800 MHz<br>d = (2.33)(√P) 800 MHz to 2.5 GHz<br>Where P is the maximum output power rating of the transmitter in watts (W) according to the transmitter manufacturer and d is the recommended separation in meters (m). Field strengths from fixed RF transmitters, as determined by an electromagnetic site survey [a] should be less than the compliance level in each frequency range. [b] Interference may occur in the vicinity of equipment marked with the following symbol: |
| NOTE 1: At 80 MHz and 800 MHz, the higher frequency range applies.<br>NOTE 2: These guidelines may not apply in all situations. Electromagnetic propagation is affected by absorption and reflection from structures, objects and people. | | | |
| [a]NOTICE: Field strengths from fixed transmitters, such as base stations for radio (cellular/cordless) telephones and land mobile radios, amateur radio, AM and FM radio broadcast and TV broadcast cannot be predicted theoretically with accuracy. To assess the electromagnetic environment due to fixed RF transmitters, an electromagnetic site survey should be considered. If the measured field strength in the location in which the MTI Procedure Chair is used exceeds the applicable RF compliance level above, the MTI Procedure Chair should be observed to verify normal operation. If abnormal performance is observed, additional measures may be necessary, such as re-orienting or relocating the MTI Procedure Chair.<br>[a]AVIS: Les forces de champ des émetteurs fixes, telles que les stations de base pour les téléphones radio (cellulaires / sans fil) et les radios mobiles terrestres, la radio amateur, les émissions de radio AM et FM et les émissions de télévision ne peuvent pas être prédites avec précision. Pour évaluer le environnement électromagnétique dû aux émetteurs RF fixes, une étude de site électromagnétique doit être envisagée. Si le mesuré la résistance au champ dans le lieu où le fauteuil de procédure MTI est utilisé dépasse le niveau de conformité RF applicable indiqué ci-dessus, le MTI Le président de procédure doit être observé pour vérifier le bon fonctionnement. Si des performances anormales sont observées, des mesures supplémentaires peuvent être nécessaires, telles que la réorientation ou le déplacement du fauteuil de procédure MTI.<br>[b]Over the frequency range 150kHz to 80MHz, field strengths should be less than 3 V/m. | | | |

| GUIDANCE AND MANUFACTURER'S DECLARATION - ELECTROMAGNETIC IMMUNITY | | | |
|---|---|---|---|
| The MTI Procedure Chair is intended for use in the electromagnetic environment specified below. The customer or the user of the MTI Procedure Chair should assure that it is used in such an environment. | | | |
| Immunity Test | IEC 60601 Test Level | Compliance Level | Electromagnetic Environment Guidance |
| Electrostatic discharge (ESD) IEC 61000-4-2 | ± 8 kV contact<br>± 8 kV air | ± 8 kV contact<br>± 2, 4, 8, 15 kV air | Floors should be wood, concrete or ceramic tile. If floors are covered with synthetic material, the relative humidity should be at least 30%. |
| Electrical fast Transient / burst IEC 61000-4-4 | ± 0.5, 1, 2 kV for power supply lines<br>± 1 kV for input/ output lines | ± 0.5, 1, 2 kV for power supply lines<br>± 1 kV for input/ output lines | Mains power quality should be that of a typical commercial or hospital environment. |
| Surge IEC 61000-4-5 | ± 0.5, 1 kV line(s) to line(s)<br>± 0.5, 1, 2 kV lines(s) to earth | ± 0.5, 1 kV<br>± 0.5, 1, 2 kV | Mains power quality should be that of a typical commercial or hospital environment. |
| Voltage dips, short interruptions and voltage variations on power supply input lines<br>IEC 61000-4-11<br>Tested at 230, 220, 127 and 120 VAC. | 0% $U_T$ (100% dip in $U_T$) for 0.5 cycle<br>0% $U_T$ (100% dip in $U_T$) for 1 cycle<br>70% $U_T$ (30% dip in $U_T$) for 25 cycles<br>0% $U_T$ (100% dip in $U_T$) for 250 cycles | 0% $U_T$ (100% dip in $U_T$) for 0.5 cycle<br>0% $U_T$ (100% dip in $U_T$) for 1 cycle<br>70 % $U_T$ (30 % dip in $U_T$) for 25 cycles<br>0% $U_T$ (100% dip in $U_T$) for 250 cycles | Mains power quality should be that of a typical commercial or hospital environment. If the user of the MTI Procedure Chair requires continued operation during power mains interruptions, it is recommended that the MTI Procedure Chair be powered from an uninterruptible power supply or a battery. |
| Power frequency (50/60 Hz) magnetic field IEC 61000-4-8 | 30 A/m | 30 A/m, 50 / 60 Hz | Power frequency magnetic fields should be at levels characteristic of a typical location in a typical commercial or hospital environment. |
| NOTE: $U_T$ is the a.c. mains voltage prior to application of the test level. | | | |

## Electrical Requirements

⚠ WARNING/AVERTISSEMENT

*To avoid risk of electrical shock, this equipment must be connected to a supply mains with protective earth.*

*Pour éviter tout risque de choc électrique, cet appareil doit être branché sur une prise électrique avec la terre électrique de protection.*

⚠ WARNING/AVERTISSEMENT

*Grounding reliability can only be achieved when the equipment is connected to an equivalent receptacle marked "Hospital Only" or "Hospital Grade".*

*Mise à la terre fiabilité ne peut être atteint lorsque l'appareil est connecté à un réceptacle équivalent marqué "Hôpital Uniquement" ou "de Qualité Hôpital".*

⚠ WARNING/AVERTISSEMENT

*When using endocardial catheters or high frequency surgical/ procedure devices, use non-conductive material to insulate the patient from metal portions of the equipment. Failure to comply may result in electric shock or burns to patient.*

*Lors de l'utilisation de cathéters endocavitaires ou dispositifs chirurgicale / procédure haute fréquence, utiliser un matériau non conducteur pour isoler le patient des parties métalliques de l'équipement. Le non-respect peut entraîner un choc électrique ou de*

*brûlures pour le patient.*

⚠ WARNING/AVERTISSEMENT

*Connecting electrical equipment to multiple socket-outlet effectively leads to creating a medical electronic system and can result in a reduced level of safety.*

*Connexion d'un équipement électrique à une prise de courant multiple crée un système électronique médicale, et peut entraîner une baisse du niveau de sécurité.*

⚠ WARNING/AVERTISSEMENT

*Equipment must be positioned in normal use such that the power cords can be easily accessed to unplug.*

*L'appareils doit être positionné en utilisation normale telle que les cordons d'alimentation peuvent être facilement accessibles à débrancher.*

⚠ WARNING/AVERTISSEMENT

*Equipment must be connected to an appropriate power source when loss of power source would result in an unacceptable risk.*

*L'appareils doivent être relié à une source d'alimentation appropriée en cas de perte de la source d'alimentation entraînerait un risque inacceptable.*

⚠ WARNING/AVERTISSEMENT

*Do not use a three to two prong adapter to plug the equipment into a two conductor outlet, as grounding reliability is not maintained.*

*Ne pas utiliser un adaptateur non de prise de terre pour brancher l'appareil sur une prise à deux conducteurs, la fiabilité de la terre n'est pas maintenue.*

⚠ WARNING/AVERTISSEMENT

*Do not plug this equipment into a low power or auxiliary outlet. This equipment must be connected to a 100-240 Volt AC (VAC), 47-63 Hertz (Hz) outlet. If this equipment is connected to an insufficient power source, it will cause irreparable damage to this device's electronics.*

*Ne branchez pas cet équipement sur une prise de faible puissance ou une prise auxiliaire. Cet équipement doit être branché sur une prise de 100-240 Volt AC (VAC), 47-63 Hertz (Hz). Si cet équipement est connecté à une source d'alimentation insuffisante, il causera des dommages irréparables à l'électronique de cet appareil.*

! NOTICE/AVIS

*The power cord may be used to simultaneously isolate both poles of the power supply by removing the power cord at the equipment input or wall receptacle.*

*Le cordon d'alimentation peut être utilisé pour isoler simultanément les deux pôles de l'alimentation en retirant le cordon d'alimentation à l'entrée de l'équipement ou la prise murale.*

## Contraindications

None.

## Transportation and Storage Conditions

| | | |
|---|---|---|
| | Ambient Temperature | -10°C to +50°C (+14°F to +122°F) |
| | Relative Humidity | 20-90% (non-condensing) |
| | Atmospheric Pressure | 700 hPa to 1060 hPa (0.69 atm to 1.05 atm) |

## Disposal of Equipment

At the end of product life, the equipment, accessories, and other consumable goods may have become contaminated due to normal medical use. Consult local codes and ordinances for proper disposal of equipment, accessories and other consumable goods.

# EQUIPMENT FEATURES

**Description of 830/829 Chair**

The 830 Series Procedure Chairs have power lift, back, tilt, foot, and foot extension functions. The 830 Series Chairs have a 725 lb. (328.8 kg) patient capacity. The 830 Series Chairs are 25” (63.5 cm) wide with an entry height of 18 3/4” (47.6 cm). The 830 Series Chairs are available in 3 different base configurations: Standard Base, Swivel Base, and Mobile Base. The Standard Base model will rise to a height of 39” (99 cm). The Swivel and Mobile Base models will rise to a height of 37” (94 cm).

The 829 Series Procedure Chairs have power lift, back, tilt, foot, and foot extension functions. The 829 Series chairs have a 725 lb (328.8 kg) patient capacity. The 829 Series Chairs are 22” (55.9 cm) wide with an entry height of 18 3/4” (47.6 cm). The 829 Series Chairs are available in 3 different base configurations: Standard Base, Swivel Base, and Mobile Base. The Standard Base model will rise to a height of 39” (99 cm). The Swivel and Mobile Base models will rise to a height of 37” (94 cm).

830/829 STANDARD BASE CHAIR

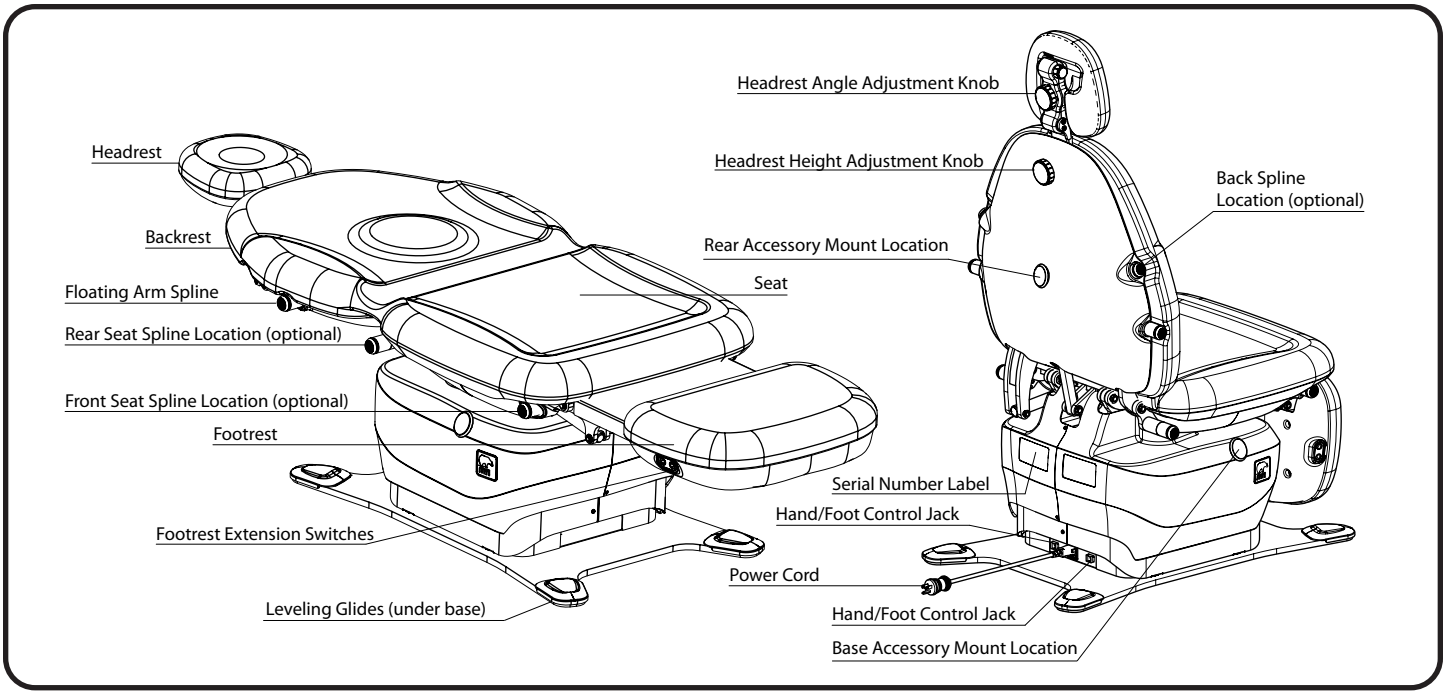

## 830/829 SWIVEL BASE CHAIR

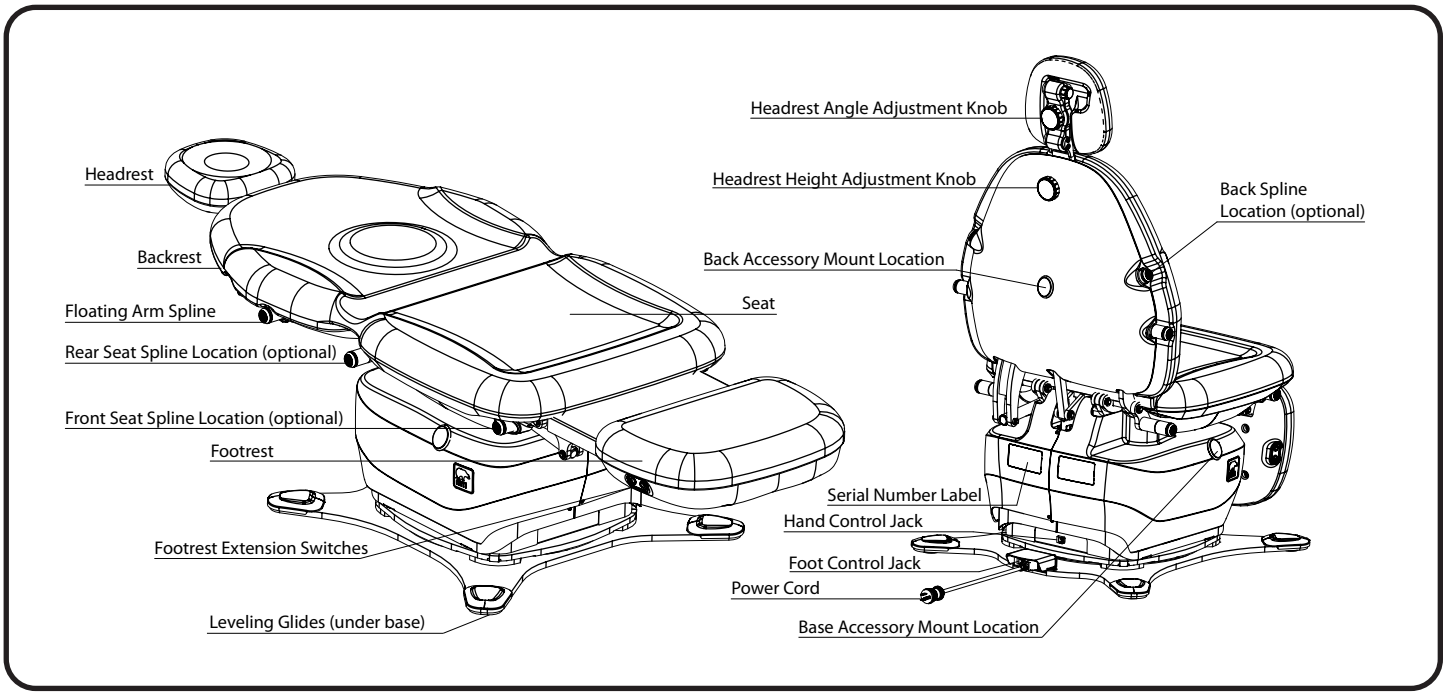


## 830/829 MOBILE BASE CHAIR

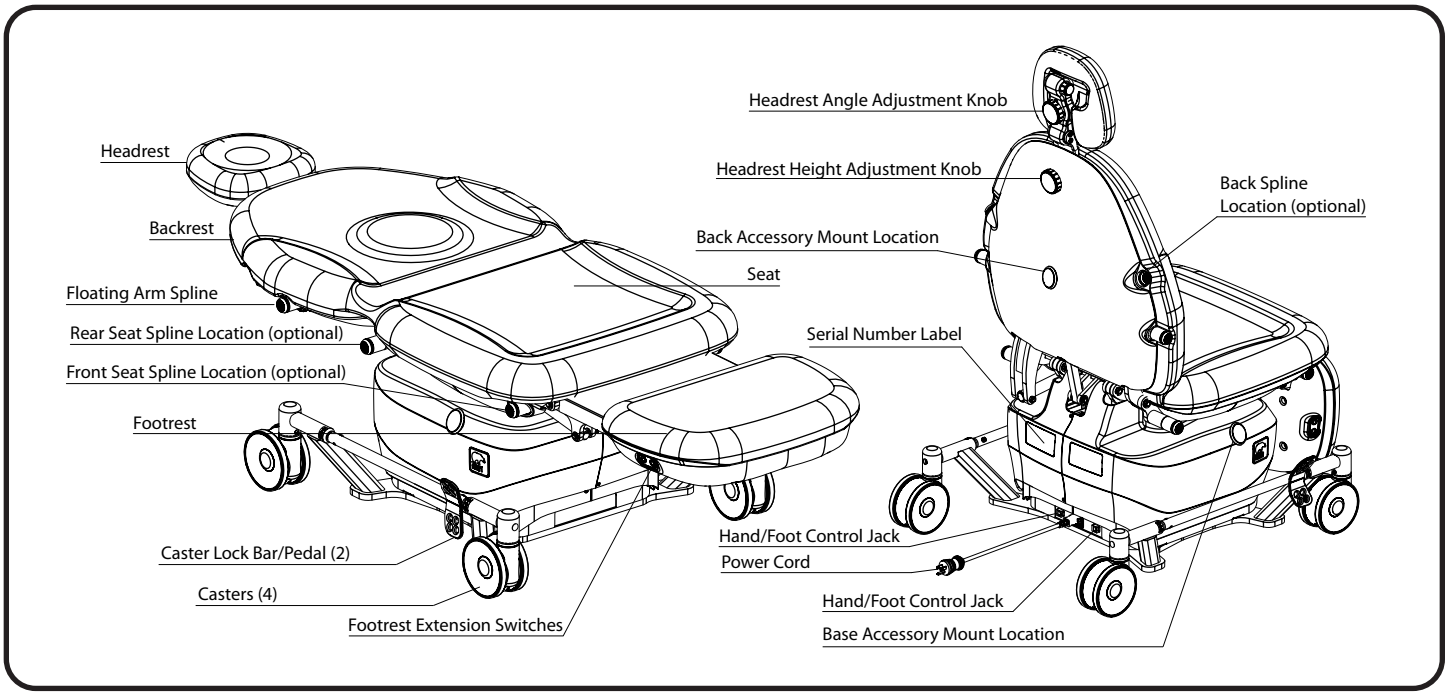

# INSTALLATION

### ⚠ WARNING/AVERTISSEMENT

*This equipment is heavy. Get help to remove it from the shipping pallet. Use proper lifting procedures when lifting to avoid serious back injury.*

*Cet équipement est lourd. Obtenir de l'aide pour le retirer de la palette d'expédition. Utilisez les procédures propre de levage pour le soulever pour éviter grave blessure au dos.*

### ⚠ WARNING/AVERTISSEMENT

*After equipment is installed, verify programmable positions (Home/P1-P4) are safe and known positions.*

*Après l'équipement est installé, vérifier les positions programmables sont des positions sûres et connues.*

### ⚠ CAUTION/PRÉCAUTION

*To move equipment, lift only from the equipment's main structure.*

*Pour déplacer l'appareil, soulevez seulement de la structure principale de l'appareil.*

### ! NOTICE/AVIS

*If this product has been exposed to low temperatures, allow adequate time for it to warm to room temperature before putting it into service.*

*Si ce produit a été exposé à de basses températures, laisser suffisamment de temps pour lui permettre de se réchauffer à température ambiante avant de le mettre en service.*

### ! NOTICE/AVIS

*Inspect the shipping boxes for visible damage. Record on bill of lading, photograph, report any damage to the carrier immediately, and contact MTI Technical Support. Request an inspection by the carrier if any concealed damage is noted.*

*Inspectez les boîtes d'expédition pour les dommages visibles. Fiche sur le connaissement, prendre une photo, et signalez immédiatement tout dommage au transporteur et contactez le support technique de MTI. Demander une inspection par le transporteur en cas de dommage caché est noté.*

## Required Tools

| | | | | | | | |
|---|---|---|---|---|---|---|---|
| | Adjustable Wrench | | Utility Knife | | Flat Head Screw Driver | | 7/16" Wrench |
| | Set of Standard US Allen® Wrenches (for Accessories) | | Phillips® Screwdriver (for Accessories) | | | | |

## Explanation of Instructions

Instructions have steps which are designated by a number. Each step may also have sub-steps designated by a letter. For example, an instruction to fasten an accessory may have 4 steps (1-4) and each of those steps may have sub-steps (A-B) to be performed before moving onto the next step.

## Unpacking and Set-up

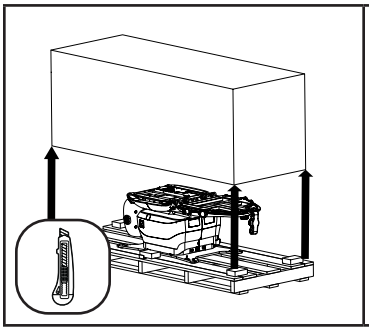

1. Remove shipping straps, shipping box, and other boxes from the pallet.

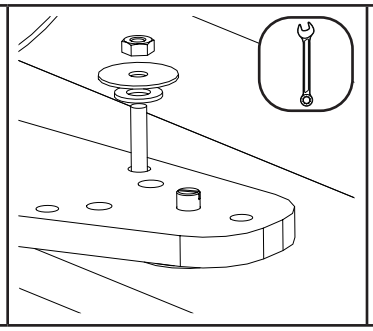

2. (Standard/Swivel Base) Remove (4) shipping bolts with adjustable or 7/16” end wrench. (Mobile Base) Remove (8) shipping bolts and mounting straps with an adjustable or 7/16” end wrench.

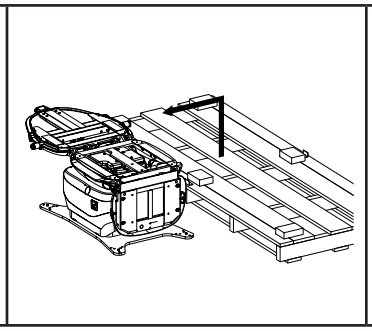

3. If the chair has 2” Leveling Glide, Duplex Outlet, Slant Mount, or Caster Accessories, attach these first, following their instructions. Slide the chair off the pallet. To move equipment, lift only from the equipment’s main structure. Recycle packaging.

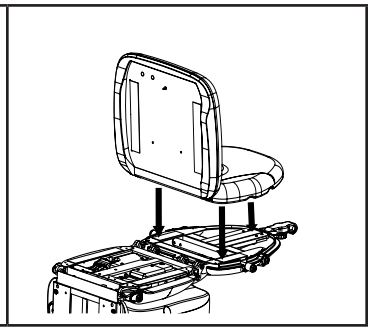

4. With the back and seat sections of the chair in the flat position, center the back portion of the seat/back cushion on the back section of the chair while holding up the seat portion of the cushion.

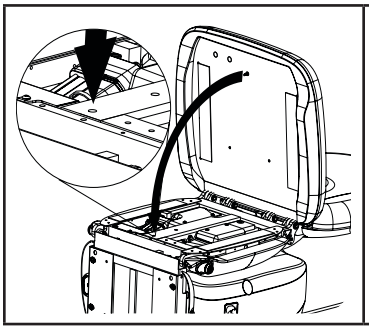

5. Lower the seat portion of the seat/back cushion into place and ensure that the ball stud enters the mating hole in the seat section of the chair.

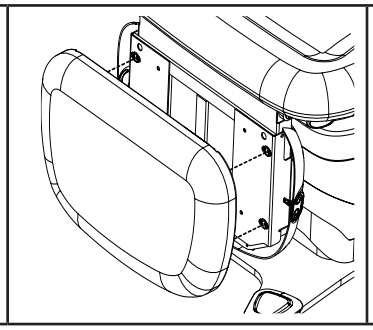

6. Attach the foot cushion by aligning the ball studs to the receptacles and pressing until all 4 snap in place.

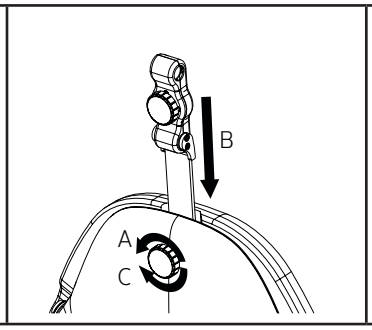


7. A. Loosen the knob on the back of the back section of the chair.

B. Insert the headrest lock mechanism into the slotted opening in the top of the backrest.

C. Tighten the knob on the backrest.

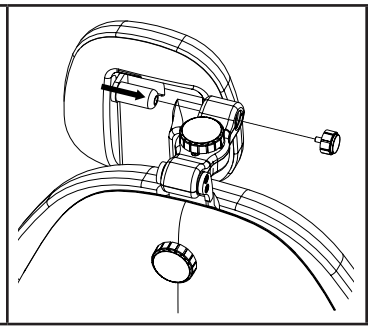

8. Loosen the knob on the articulating headrest mechanism and rotate it forward as shown. Remove the knob on the back of the headrest. Insert the headrest into lock mechanism. Reinsert knob, position headrest as desired, and tighten both knobs.

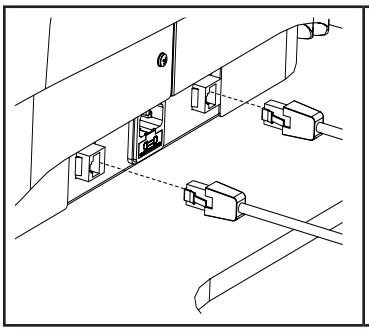

9. (Standard/Mobile Base) Plug in the hand control and foot control in the hand/foot control jacks at the base of the chair. For Swivel Base Chairs see step 10.

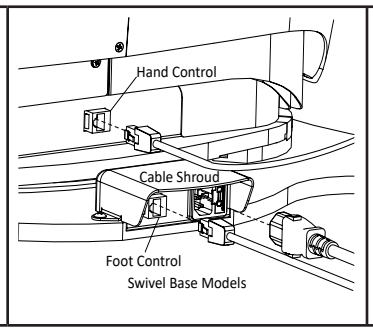


10. (Swivel Base) Plug in the hand and foot controls at the base of the chair. Note that the foot control jack is located under the rear cable shroud.

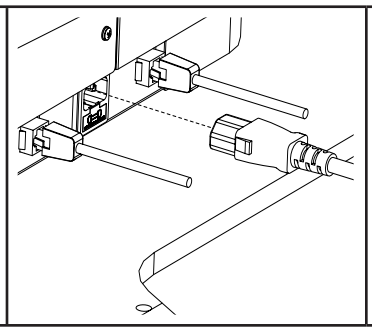

11. Insert the power cord at the base of the chair. Press firmly until it bottoms out. Plug the opposite end of the power cord into an appropriately marked receptacle.

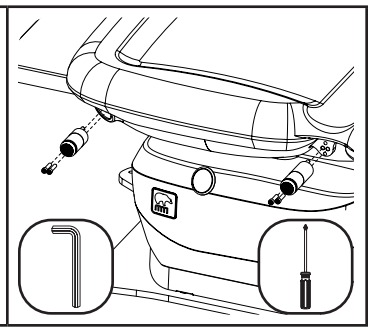

12. If applicable, attach any accessories. See the accessory’s Instruction Guide for installation instructions.

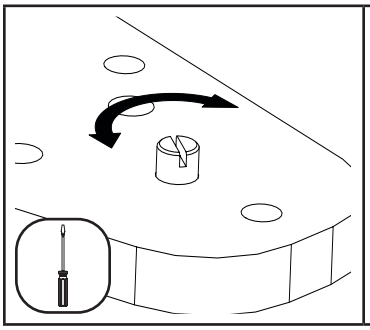

13. (Swivel and Standard Base) Position the chair in the desired location. Level the chair by adjusting the height of the individual leveling glides with a flat head screwdriver.

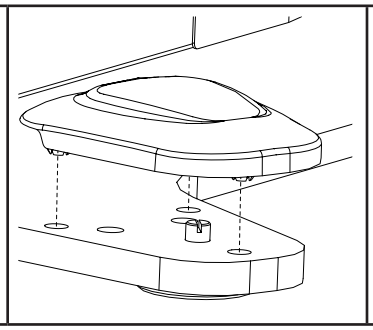

14. (Swivel and Standard Base) Install the (4) leveling glide covers over the feet of the baseplate. Align the snap features over the three holes and press down.

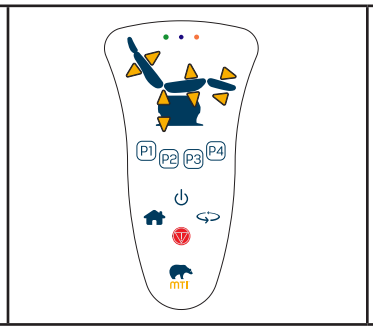


15. Verify all functions of the chair are operational. Set the Smart Controller™ Settings for the Home, Program and Swivel Buttons. See “Smart Controller™ Technology” on page 14 for instructions.

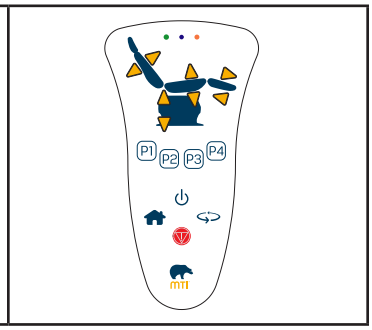


16. Save Home and Program Buttons’ positions to desired locations. See “Controls” on page 16 for programming instructions.

# OPERATION

## Operating Conditions

| | | |
|---|---|---|
| | Ambient Temperature | +10°C to +40°C (+50°F to +104°F) |
| | Relative Humidity | 30% to 75% (non-condensing) |
| | Atmospheric Pressure | 700 hPa to 1060 hPa (0.69 atm to 1.05 atm) |

Maximum surface temperature of applied part chair surfaces will not exceed 42°C.

## SmartTech™

SmartTech™ is the combination of MTI’s Smart Controller™ and Smart Safety™ technology using a centralized computer controller that enhances safety, reduces energy consumption, and provides smoother movement, additional memory options, and more user preferences.

## Smart Controller™ Technology

The Smart Controller™ technology is the stack of technology features built into the chair, allowing the chair to move softly and smoothly with soft start/stop technology, a hibernation state to conserve power and a User Program Mode allowing users to change how some of the buttons function.

## User Program Mode

The User Program Mode allows users to set how the Home, Program and Swivel Buttons function. For user preference these button settings can be changed by entering the User Program Mode to make the setting changes described below.

| Home Button and Program Buttons Settings | |
|---|---|
| Momentary Button Setting | This setting is the factory default setting for the Home Button and Program Buttons. It allows the user to press and release the Home Button or Program Buttons to automatically move the chair to the button's saved position. Press any button, except the same button that was pressed to initiate movement, to stop automatic motion. |
| Maintain Button Setting | This setting allows the user to press and hold the Home Button or Program Buttons to move the chair to the button's saved position. Release the button to stop movement of the chair. |

| Swivel Button Settings | |
|---|---|
| Auto-Lock Swivel Setting | This setting is the factory default Swivel Button setting. Pressing the Swivel Button once will unlock the swivel. The swivel will automatically lock after 30 seconds, or a press of any button (including the Swivel Button) will lock the swivel. |
| Lock/Unlock Swivel Setting | Pressing the Swivel Button once will unlock the swivel. The swivel will not lock again until any button is pressed (including the Swivel Button). If any button that would result in motion is pressed while the swivel is unlocked, the swivel will automatically lock before moving. |

To enter the Smart Controller™ User Program Mode:

1. Press and Hold the **Stop** button for 5 seconds. The chair will beep once and the blue and orange LEDs on the hand control will flash twice. The Foot Control does not have LEDs, but there are corresponding lights on the chair PCA inside the chair.
2. Press the following sequence of buttons to enter the Smart Controller™ User Program Mode: **Back Up, Back Up, Back Down, P2, Stop**. Each button press will beep and, if the correct sequence is entered, the chair will sound a low-high tune. If the wrong sequence of buttons is entered, the chair will sound three low beeps and return to normal operation.
3. Press the following sequences of buttons to change the Home Button and Program Buttons Settings or Swivel Button Setting.

| Home Button and Program Buttons Settings | |
|---|---|
| Momentary Button Setting | Back Up, Back Up, P1 |
| Maintain Button Setting | Back Up, Back Up, P2 |

| Swivel Button Settings | |
|---|---|
| Auto-Lock Swivel Setting | Swivel, P1 |
| Lock/Unlock Swivel Setting | Swivel, P2 |

4. The chair will sound a high-low-high tune to accept the setting and the blue LED will flash twice. If the wrong buttons are pressed, the chair will sound three low beeps and the blue LED will not flash.
5. To exit the Smart Controller™ User Program Mode, press the Home Button. The chair will sound a high-low tune and only the green light will be on. The chair will also automatically exit the Smart Controller™ User Program Mode after 30 seconds if no buttons are pressed.

## Hibernation State

To conserve power, after 60 minutes of non-use the chair will automatically hibernate. To wake the chair from the Hibernation State, press any button.

## Smart Safety™ Technology

The Smart Safety™ technology is the safety features built into the Smart Controller™, making the chair safer and easier to use. The Smart Safety™ technology includes the Collision Avoidance System™, which establishes Safe Zones that will disable a function(s) when the chair encounters a Safe Zone boundary. When the Collision Avoidance System™ detects a Safe Zone boundary, the chair will sound a single tone and disable the chair function(s). To re-enable full chair functionality, move the chair function into the Safe Zone.

## Safety Lockout

The Safety Lockout disables all commands to prevent unwanted or inadvertent movements.

To enable the Safety Lockout, press the following sequence of buttons (within 1 second between presses): **Stop, Stop, Back Up, Stop.** If a swivel model chair is unlocked when Safety Lockout is enabled, the swivel will automatically lock and remain locked, even upon disabling the Safety Lockout.

To disable the Safety Lockout, press the following sequence of buttons: **Stop, Stop, Back Down, Stop.**

## Controls

| ITEM | DESCRIPTION | FUNCTION |
|---|---|---|
| FOOT AND HAND CONTROLS | | |
| 1 | Lift Up/Down Buttons | Raises or lowers the chair top by pressing the desired direction. |
| 2 | Back Up/Down Buttons | Raises or lowers the backrest by pressing the desired direction. |
| 3 | Tilt Up/Down Buttons | Decreases or increases the angle of the seat by pressing the desired direction. |
| 4 | Foot Up/Down Buttons | Raises or lowers the footrest by pressing the desired direction. The footrest will automatically extend while pressing Foot Up and, when held, will continue to extend the foot fully. The Foot Down Button will automatically retract the foot as it approaches the floor. |
| 5 | Stop Button(Emergency Stop Button) | Stops all movement of chair and locks the swivel. |
| 6 | Swivel Button | The Swivel Button locks and unlocks the swivel base on the chair. The Swivel Button has two button settings that can be changed by the user.<br>**Auto-Lock Swivel Setting:** Pressing once will unlock the swivel. The swivel will automatically lock after 30 seconds, or a press of any button (including the Swivel Button) will lock the swivel.<br>**Lock/Unlock Swivel Setting:** Pressing once will unlock the swivel. The swivel will not lock again until any button is pressed (including the Swivel Button). If the swivel is left unlocked and the chair enters hibernation state (after 1 hour), the swivel will automatically lock. |
| 7 | Home Button | The Home Button moves the chair to either a Programmed Home Position or an ADA Compliant Home Position. The Programmed Home Position is user programmable and can be saved in any preferred position.<br>**Momentary Button Setting:** Press and release the Home Button to move the chair to the Programmed Home Position. Press and release the Home Button twice within 1 second to move the chair to the ADA Compliant Home Position (Lift Down, Tilt Down, Back Up, and Foot Down and Retracted). To save a new Programmed Home Position, position the chair to the desired position then press and hold the Home Button for 10 seconds. Chair will play a high-low-high tune after the Programmed Home Position has been saved.<br>**Maintain Button Setting:** Press and hold the Home Button to move the chair to the Programmed Home Position. After arriving at Programmed Home, release the Home Button and then press it again within 1 second to move the chair to the ADA Compliant Home position (Lift Down, Tilt Down, Back Up, and Foot Down and Retracted). To save a new Programmed Home Position; position the chair to the desired position, press and release the Stop Button twice, then hold the Home Button for 10 seconds. Chair will play a high-low-high tune after the Programmed Home Position has been saved. |

| | | |
|---|---|---|
| 8 | Program Buttons<br>(P1, P2, P3, P4) | The Program Buttons move the chair to a user defined Program Position. NOTE: The chair has no pre-existing Program Positions upon arrival and will only beep and not move until Program Positions have been saved.<br>The Program Buttons have two button settings that can be changed by the user.<br>**Momentary Button Setting:** Press and release to automatically move the chair to the Program Position. To save a Program Position, position the chair to the desired position then press and hold a Program Button for 5 seconds. Chair will play a high-low-high tune after the position has been saved.<br>**Maintain Button Setting:** Press and hold the button to move the chair to the Program Position.<br>To save a Program Position; position the chair to the desired position, press and release the Stop Button twice, then hold the Program Button for 5 seconds. Chair will play a high-low-high tune after the position has been saved. |
| 9 | On/Off Button | Turns the chair on and off (Prevents accidental actuation of the chair). |
| 10 | LED Indicators | Used to provide user feedback on conditions, inputs, and errors. Left to right are green, blue, and orange LEDs. |
| FOOT EXTENSION SWITCHES | | |
| 11 | Foot Extend/Foot Retract Buttons | Independently extends or retracts the foot section of the chair by pressing the desired direction.<br>NOTE: Footrest will not extend until foot has been raised at least 20° and moved away from Safe Zone boundary. When foot is raised, footrest retraction is limited to prevent interference with seat. |

## NOTICE/AVIS

*For additional safety, any button will stop all automatic motions except for the same button that was pressed to initiate movement.*

*Pour plus de sécurité, n'importe quel bouton peut arrêter tous les mouvements automatiques à l'exception du bouton même qui a été pressé de commencer le mouvement.*

## NOTICE/AVIS

*Swivel Button is present on all foot and hand controls. If the chair is a mobile or standard base chair, pressing the Swivel Button will act as a stop button while the chair is moving.*

*Le bouton de pivotement est présent sur tous les commutateurs au pied et à main. Si la chaise est une chaise de base mobile ou standard, appuyer sur le bouton de pivot agira comme un bouton d'arrêt pendant que la chaise bouge.*

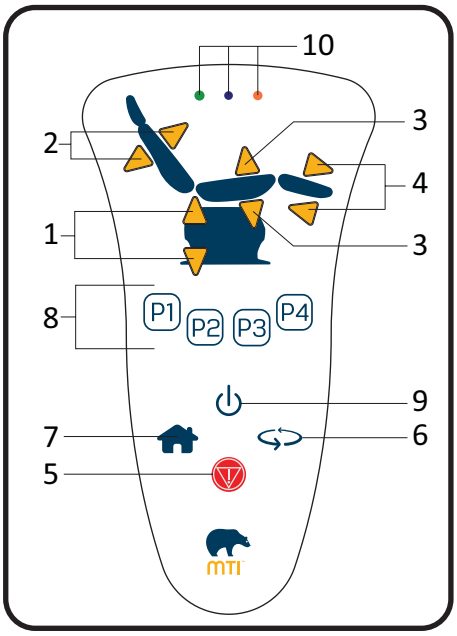


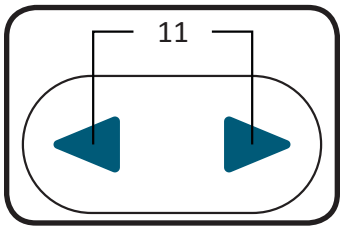


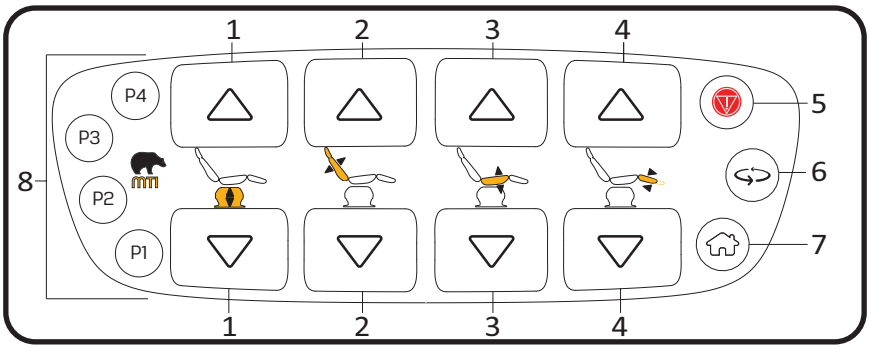

## Headrest Operation

Articulating Headrests

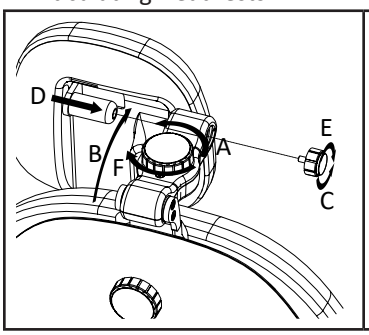


1. To attach the headrest.

A. Loosen the knob on the articulating headrest lock mechanism.

B. Rotate the articulating headrest lock mechanism forward.

C. Remove the knob on the back of the headrest (turn counterclockwise).

D. Insert the headrest pintle into the articulating headrest lock mechanism.

E. Reattach the knob into the end of the headrest pintle (turn clockwise).

F. Reposition the headrest to a desired location and tighten the knob on the articulating headrest mechanism.

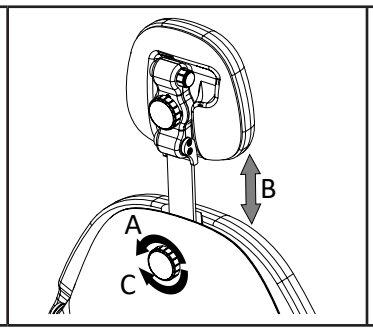


2. To adjust the height of the headrest:

A. To loosen, turn the knob on the back of the chair counterclockwise.

B. Adjust the height of the headrest.

C. To secure, turn the knob clockwise.

The headrest can be completely removed, if desired, when the knob is loosened.

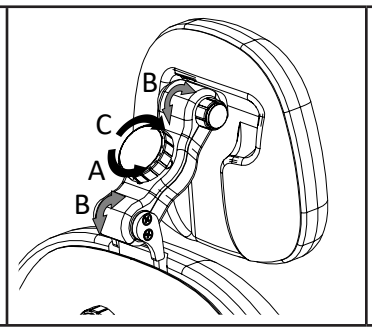


3. To adjust the angle of the headrest:

A. To loosen, turn the knob on the articulating headrest lock mechanism counterclockwise.

B. Adjust the position and angle of the headrest.

C. To secure, turn the knob clockwise.

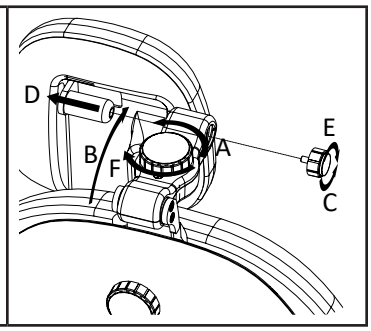


4. To remove a headrest:

A. Loosen the knob on the articulating headrest lock mechanism.

B. Rotate the articulating headrest lock mechanism forward.

C. Remove the knob on the back of the headrest (turn counterclockwise).

D. Pull the headrest completely out of the headrest lock mechanism.

E. Reattach the knob to the end of the headrest pintle to keep it from being lost (turn clockwise).

## Swivel Base Operation

For Swivel Base model only, use the following instructions to learn how to operate the swivel base and the two user preference settings.

The Swivel Base model has two Swivel Button settings for user preference. To change the setting, see “To enter the Smart Controller™ User Program Mode:” on page 15. To operate the swivel base, see Swivel Button Settings below.

**Auto-Lock Swivel Setting:** This setting is the factory default Swivel Button setting. Pressing the Swivel Button once will unlock the swivel. The swivel will automatically lock after 30 seconds, or a press of any button (including the Swivel Button) will lock the swivel.

**Lock/Unlock Swivel Setting:** Pressing the Swivel Button once will unlock the swivel. The swivel will not lock again until any button is pressed (including the Swivel Button). If any button is pressed that would cause motion, while the swivel is unlocked, the swivel will automatically lock before moving. If the swivel is left unlocked and the chair enters hibernation state (after 1 hour), the swivel will automatically lock.

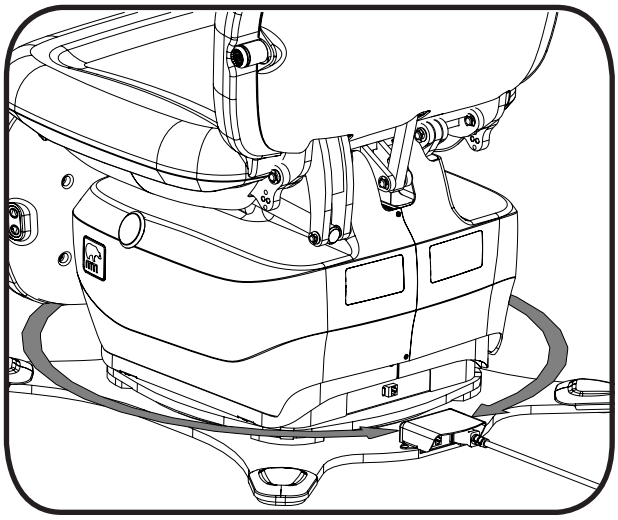

## Mobile Base Operation

If you purchased the Mobile Base model, use the following instructions to learn how to operate the mobile base.

The Mobile Base chair has (3) Total Lock Casters and (1) Steering Caster which operate in a LOCK, FREE, or STEER Mode.

The two casters on the patient’s right side and the rear caster on the patient’s left side of the chair are Total Lock Casters. The front caster on the patient’s left side is the Steering Caster.

In the LOCK position, the Total Lock Casters will not roll or swivel. In the FREE or STEER position, the Total Lock Casters will roll and swivel.

In the LOCK position, the Steering Caster will not roll or swivel. In the FREE position, the Steering Caster will swivel and roll. In the STEER position, the Steering Caster will roll but not swivel.

To move the pedal from one mode to the other, firmly press down on the lower pedal or, with either the toe or heel of the shoe, lightly tap the top of the pedal until the pedal indicator line points to the desired mode on the indicator label.

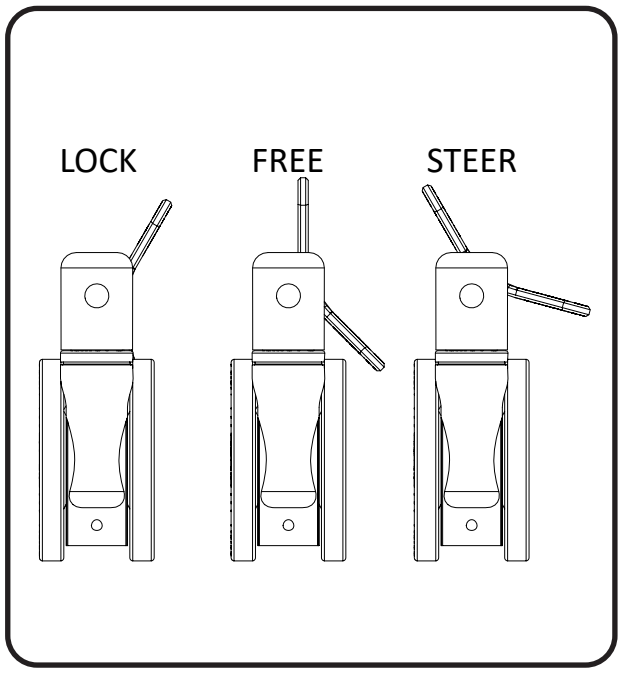


MODES

MODE INDICATOR: Each locking bar has a mode indicator line on the center of the pedal that points to the adjacent indicator label on the base of the chair. Note that the (3) Total Lock Casters operate the same whether they are in FREE or STEER Mode.

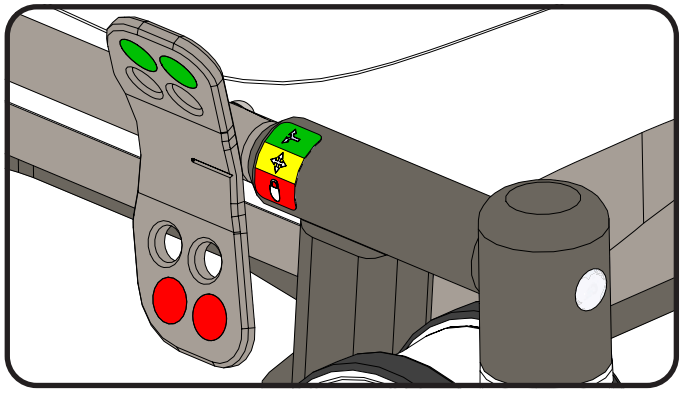

MODE INDICATOR

LOCK MODE: This mode is used to prevent movement of the chair. When both pedals are in the LOCK position; all (4) casters will not roll or swivel.

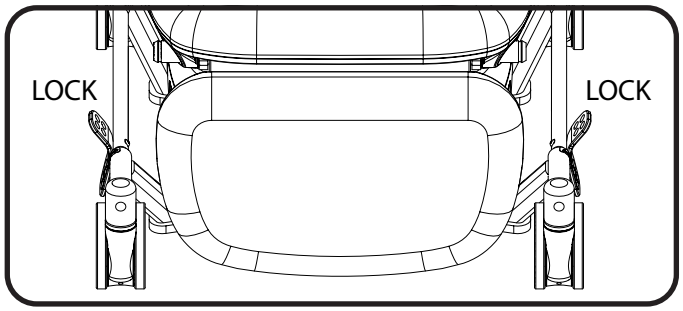


LOCK MODE

FREE MODE: This mode is used when you need to pull the chair away from an object in a perpendicular direction or turn the chair with a zero radius. When both pedals are in the FREE position; all (4) casters will roll and swivel freely.

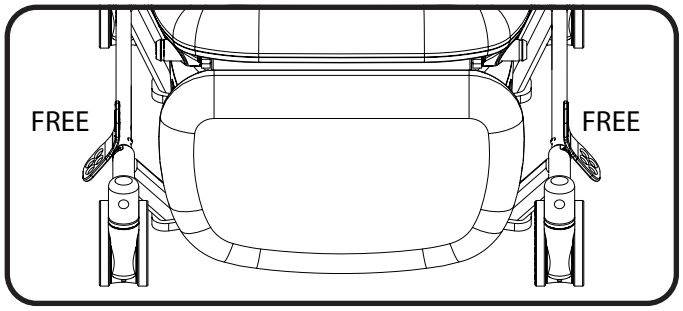


FREE MODE

STEERING MODE: This mode is used for transport as the Steering Caster acts as a steering wheel to aid in easy transport. When the patient's left-hand pedal is in the STEER position and the patient's right-hand pedal is in the FREE or STEER position; the (3) Total Lock Casters will roll and swivel freely and the (1) Steering Caster will roll but will not swivel.

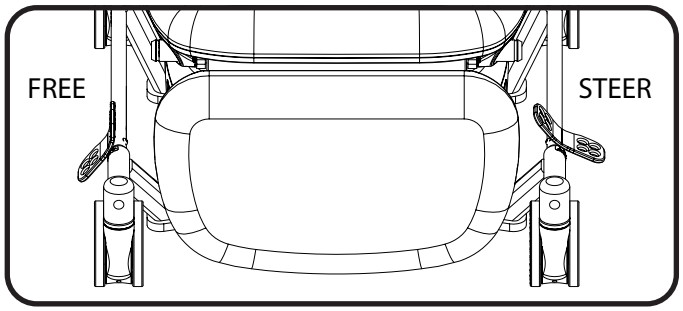


STEER MODE

## NOTICE/AVIS

*Orient the steering caster opposite the direction of travel to prevent the casters from wobbling.*

*Orientez la roulette de direction opposée à la direction de voyage pour éviter le tremblement des roulettes.*

# LIST OF ACCESSORIES

| DESCRIPTION | USE | RESTRICTIONS |
|---|---|---|
| Headrests | | |
| Deep Oval, Horseshoe, Magnetic, Ophthalmic, Prosthetic, and Rectangular Articulating Headrest | Provides an articulating surface with various pillow shapes/sizes to support patient's head. | |
| Arms | | |
| Arm, IV/Surgery, 18"Deluxe or Standard 8-way Seat Rail Mtd | Provides an articulating surface for patient's arms. | Requires Spline Assy, A Size (set of 2) mounted in Front Seat Spline Location.<br>Requires Accessory Mtg Rail Assy. |
| Arm, IV/Surgery, 18" Deluxe or Standard 8-way Floating Mtd | Provides an articulating surface for patient's arms. | |
| Arm, IV/Surgery, 24" Deluxe 8-way Back Rail Mtd | Provides an articulating surface for patient's arms. | Requires Spline Assy, A Size (set of 2) mounted in Back Spline Location.<br>Requires Accessory Mtg Rail Assy. |
| Arm, Patient, 4-way Floating | Used by patient to rest their arms during exams/procedures. | |
| Arms, Patient, Slide Back Floating<br>(pair, LH, or RH) | Used by patient to rest their arms during exams/procedures. | |
| Procedure Table, Hand/Forearm | Provides an articulating surface for patient's arms. | |
| Surgery Table, Hand/Arm | Provides an articulating surface for patient's arms. | Requires Spline Assy, A Size (set of 2) mounted in Back Spline Location.<br>Requires Accessory Mtg Rail Assy. |
| Lighting Options | | |
| Exam Light, Lumerus LED, Flex Neck, 12-24V DC | Provides lighting during patient procedures. | Requires Adptr Kit, Back Mtd Exam Light w/100-240V Transformer. |
| Adptr Kit, Back Mtd Exam Light w/100-240V Transformer | Provides a mount on the back of the chair and transformer for 12-24V Lumerus Exam Light. | Not compatible with Paper Roll Holder. |
| Exam Light, Lumerus LED, Flex/Rigid Neck, 12-24V DC | Provides lighting during patient procedures. | Requires Mayo Tray w/Light Adptr or Post Assy w/Light Adptr. |
| Other Accessories | | |
| Accessory Mount, Base | Provides a base mount for Mayo Trays, IV Rods, Lights, and Cardiac Monitor Trays. | |
| Accessory Mtg Rail Assy, 829 Seat & 830 Back/Seat | Provides standard hospital rails to attach to the seat or back of the chair for mounting accessories. | Requires Spline Assy, A Size (set of 2) mounted in Front Seat or Back Spline Locations. 829 Back Rail should be exclusively used on 829 Back section. |
| Accessory Mtg Rail Assy, 829 Back | | |
| Casters, Lkg Chair (set of 4) | Provides field installable casters to make chair mobile. | Not available on mobile or swivel base chairs. Not compatible with 2" Leveling Glides. |
| Chart Holder, Seat Spline Mtd | Used to keep patient's chart on the chair. | Requires Spline Assy, A Size (set of 2) mounted in Front Seat Spline Location. |

# LIST OF ACCESSORIES

| DESCRIPTION | USE | RESTRICTIONS |
|---|---|---|
| Foot Control Slant Mount Assy, Mobile Base | Provides a slanted surface to mount a foot control at the back of the chair. | Only compatible with Mobile Base Chair models. |
| Foot Control Slant Mount Assy, Std Base | Provides a slanted surface to mount a foot control at the back of the chair. | Only compatible with Standard Base Chair models. |
| Forearm Support f/Deep Oval Headrest Assy (set of 2) | Provides a forearm support during chinning procedures. | Requires Deep Oval Headrest. |
| Forearm Support f/Prosthetic Headrest Assy (set of 2) | Provides a forearm support during chinning procedures. | Requires Prosthetic Headrest. |
| Head Stabilizer Cushion, Ophthalmic Headrest Mtd | Supports/stabilizes patient's head during procedure. | Requires Ophthalmic Headrest. |
| IV Rod Assy, Adj | Provides an adjustable IV rod. | Requires Accessory Mount, Base. |
| IV Rod Assy, Adj, Post Mtd | Provides an adjustable IV rod mounted to the post on a base mounted accessory. | Requires Mayo Tray Assy, Mayo Tray with Light Adptr Assy, or Cardiac Monitor Tray Assy. |
| Leveling Glide Assy, 2" (set of 4) | Provides taller leveling glides than standard. | Not available on mobile or swivel base chairs. Not compatible with Casters, Lkg Chair (set of 4). |
| Mayo Tray Assy, Base Mount Mtd | Provides a tray for the placement of small instruments and other items. | Requires Accessory Mount, Base. Not compatible on the same side as a Mtg Bracket Assy or Electrosurgery Generator. |
| Mayo Tray w/Light Adptr Assy, Base Mount Mtd | Provides a tray for the placement of small instruments and other items and a mount for an Exam Light, Lumerus LED, Flex/Rigid Neck | Requires Accessory Mount, Base. Not compatible on the same side as a Mtg Bracket Assy, Electrosurgery Generator. |
| Monitor Mount Assy w/Post, Base Mount, Cardiac | Mounts a patient monitor for viewing during procedures. | Requires Accessory Mount, Base. |
| Mtg Bracket Assy, Electrosurgery Generator | Provides a bracket to mount an Electrosurgery Generator to the base of a chair. | Not compatible on the same side as an Accessory Mount, Base. |
| Outlet Kit, Duplex, 115V ONLY | Provides power for 115V accessories. | Not compatible with Mobile or Swivel Base Chairs. |
| Paper Roll Holder Assy, Adjustable 18" or 21" | Used for mounting a paper roll to the back of the chair. | Not compatible with a back mounted Exam Light. |
| Post Assy w/Light Adptr, Base Mount | Provides a post for mounting an Exam Light, Lumerus LED, Flex/Rigid Neck, 100-240V. | Requires an Accessory Mount, Base. |
| Power Cord, IEC w/Hospital Grade 90 deg Plug, 3 ft | Provides a 3' power cord with a 90 degree plug. | |
| Spline Assy, A Size (set of 2) | Provides 2 splines to mount in various places on the chair. | Not used on the Rear Seat Spline Location on 830 Series Procedure Chairs. |
| Spline Assy, B Size (set of 2) | Provides 2 splines to mount in the Rear Seat location. | Only used on 830 Procedure Chair in Rear Seat Spline Location. |
| Stirrups, Seat Spline Mtd (pair) | Used to position patient's legs during procedures. | Requires Spline Assy, A Size (set of 2) mounted in Front Seat Spline Location. |

# LIST OF ACCESSORIES

| DESCRIPTION | USE | RESTRICTIONS |
|---|---|---|
| Strap, Body Restraint | Provides a strap to secure the patient's body. | |
| Strap, Leg Restraint | Provides a strap to secure the patient's legs. | |
| Transfer Support/Bed Rail, Flip-up, Ambidextrous | Provides a support for entry and exit into the chair. Also used as a Bed Rail to secure a patient. | Cannot be inserted while an arm is in the Floating Arm Spline.<br>Requires Spline Assy, A Size (Set of 2) for 829 Series Procedure Chairs mounted in Rear Seat Spline Location.<br>Requires Spline Assy, B Size (Set of 2) for 830 Series Procedure Chairs mounted in Rear Seat Spline Location. |
| Vision Block, Seat Spline Mtd | A curtain to shield procedures from the patient's view. | Requires Spline Assy, A Size (set of 2) mounted in Front Seat Spline Location. |
| Wrist Support Assy, Crescent | Provides an adjustable support for wrists during a procedures. | Requires Ophthalmic Headrest. |
| Wrist Support Assy, U-Shaped | Provides an adjustable support for wrists during a procedures. | Requires Ophthalmic Headrest. |

# MAINTENANCE

⚠ WARNING/AVERTISSEMENT

*There are no user serviceable parts inside. Refer all servicing to a qualified service technician.*

*Aucune pièce interne ne peut être réparée par l'utilisateur. Adressez-vous à un technicien qualifié.*

⚠ WARNING/AVERTISSEMENT

*After equipment is serviced, verify programmable positions (Home/P1-P4) are safe and known positions.*

*Après l'équipement est installé, vérifier les positions programmables (position retournée/P1-P4) sont des positions sûres et connues.*

⚠ WARNING/AVERTISSEMENT

*The Control of Hazardous Energy (lockout/tagout) 29 CFR §1910.147 procedure must be followed to disable equipment, preventing the release of hazardous energy while performing servicing and maintenance activities.*

*La procédure de La Maîtrise des Énergies Dangereuses (lockout/déconsignation) 29 CFR §1910.147 doit être suivie pour désactiver l'équipement, empêchant la libération des énergies dangereuses lors de l'exécution des activités de maintenance et d'entretien.*

⚠ WARNING/AVERTISSEMENT

*MTI recommends cleaning the equipment frequently. Follow the current CDC Guideline for Disinfection & Sterilization in Healthcare Facilities or other local guidelines for disinfecting.*

*MTI recommande de nettoyer l'appareil fréquemment. Suivez les lignes directrices actuelles du CDC pour la désinfection et la stérilisation dans les établissements de santé ou d'autres directives locales pour la désinfection.*

⚠ CAUTION/PRÉCAUTION

*This equipment may be damaged by solvents and dyes. Immediately remove any fluids spilled on the equipment.*

*Cet équipement peut être endommagé par des solvants et des colorants. Retirer immédiatement tout liquide renversé sur l'équipement.*

⚠ CAUTION/PRÉCAUTION

*Contact with sharp or pointed objects can damage the upholstery. Do not place hard surface objects on the upholstery surfaces as temporary indentations or impressions in the upholstery cover will result. Prolonged contact with a hard or irregular shaped object may make the impression semi-permanent.*

*Le contact avec des objets pointus ou tranchants peut endommager le capitonnage. Ne placez pas d'objets de surfaces dures sur les surfaces de capitonnage d'ameublement, comme des empreintes temporaires ou des impressions dans le couvercle du capitonnage en résulteront. Un contact prolongé avec un objet en forme de disque ou irrégulière peut faire l'impression semi-permanente.*

⚠ CAUTION/PRÉCAUTION

*Any sprayed disinfectant or cleaning solution should be wiped up immediately after application and not let to stand. A small sample area should be tested before any large application of any cleaner/disinfectant.*

*Tout désinfectant pulvérisé ou solution de nettoyage doivent être essuyés immédiatement après l'application et ne pas laisser reposer. Une petite zone de l'échantillon doit être testé avant toute application complète d'un nettoyant/désinfectant.*

⚠ CAUTION/PRÉCAUTION

*Avoid prolonged direct sunlight exposure to preclude decolorization.*

*Évitez l'exposition prolongée au soleil direct afin d'éviter la décoloration.*

⚠ CAUTION/PRÉCAUTION

*Replace damaged upholstery to prevent cross contamination.*

*Remplacer le capitonnage endommagé pour éviter la contamination croisée.*

## Disinfection

Follow the current CDC Guideline for Disinfection & Sterilization in Healthcare Facilities or other local guidelines.

### Upholstery

MTI understands that many customers prefer to use a pre-mixed disinfecting solution in a spray or wipe. It is MTI's recommendation not to use sprays because over time the overspray will cause damage to the surfaces if not immediately wiped up. See "MTI Suggested Disinfectants Policy" for more details on disinfecting solutions which have been tested on MTI's products. It is available for download at www.mti.net/DisinfectantsPolicy. In the U.S. & Canada, call

(877) 875-4990, or International call (801) 875-4990, or email technical.support@mti.net to request a copy.

## Cleaning

Upholstery should be cleaned weekly with a mild liquid soap and water mixture. Afterwards, wipe upholstery with clean damp cloth.

**Painted and Plastic Surfaces**

All painted metal parts have been electrostatically painted and the paint is baked on for durability. Weekly, those surfaces should be wiped down with a quality grade cleaner and a soft cloth or a damp cloth with mild soap.

## Preventative Maintenance

Periodically inspect the following areas:

1. All fasteners and pins should be in place and tightened securely.
2. Power cord should be free of cuts or other visible damage.
3. All mechanical functions should operate properly.

Have an authorized service technician inspect your equipment once a year.

## Power Cord Removal Instructions

1. To remove the power cord, pull back on the red tabs of the power cord at the base of the chair. On swivel base models, pull back on the lower red tab of the power cord. See “Unpacking and Set-up” on page 13 for installation instructions.

## Fuse Replacement Instructions

1. See Figure 1. Pull back on the red tabs of the power cord at the base of the chair to remove the power cord.
2. Using a flat head screwdriver, open the fuse drawer in the power cord jack.
3. Remove the burnt fuse(s).
4. Insert new fuse(s) into the fuse drawer with same size fuse (5mm x 20mm 4 Amp 250V Time-Delay Glass tube type) removed in step 3 (See Figure 1).
5. Reinsert the fuse drawer. Ensure it is completely inserted.
6. Reinsert the power cord into the base of the chair.

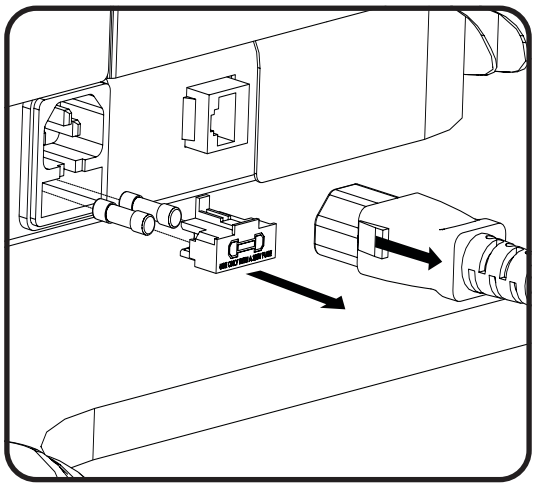

Figure 1

## Calls for Service

Equipment’s model and serial number information are required when calling for service.

Serial number is indicated by the SN symbol located on the serial number tag.

If service is required, contact MTI.

U.S. & Canada (877) 875-4990
International (801) 875-4990
Fax (801) 952-0548
technical.support@mti.net
www.mti.net

## LIMITED WARRANTY

Medical Technology Industries, Inc. (hereinafter referred to as MTI), shall repair or replace products of its manufacture, which prove to be defective in material and/or workmanship for a period of twelve (12) months from the date of shipment to the customer (the "Warranty Period"). MTI will, at its option, provide parts to the customer or repair the defective part at MTI's factory or authorized repair facility. Except as it may otherwise specifically agree in writing, MTI shall not be liable for transportation or labor charges for repairs or adjustments or other work done on any of its products by MTI's authorized dealers or service organizations.

Customer shall notify MTI of any alleged claim or defect within fourteen (14) days from the date customer discovers, or upon reasonable inspection should have discovered, such alleged claim or defect (but in any event before the expiration of the Warranty Period). All repair parts are warranted for Ninety (90) calendar days from the date of shipment to the customer. Warranty is non-cumulative.

This warranty does not apply to any part or product which upon examination by MTI or its authorized agents indicates the product has been repaired or altered in any way by persons other than MTI or its authorized agents, has been misused, abused or used in a manner contrary to any instructions issued by MTI. Any parts or products claimed under this warranty must be properly packaged by customer and returned to MTI's factory with no liability to MTI for the parts, products or transportation charges thereon.

In no event, shall MTI have any liability for consequential, indirect, incidental, special, exemplary, punitive or enhanced damages, lost profits or diminution in value arising out of or relating to a product defect or the repair or replacement of any products manufactured or sold by it.

The Foregoing Limited Warranty Is Made In Lieu Of All Warranties Expressed Or Implied, And MTI Makes No Other Warranty Whatsoever With Respect To The Products Including But Not Limited To, Any Implied Warranty Or Merchantability Or Fitness For A Particular Purpose.

# TROUBLESHOOTING GUIDE

## NOTICE/AVIS

*See "GUIDE TO INDICATOR LIGHTS AND SOUNDS" on page 29 for additional solutions. For more information on this equipment, including circuit diagrams, parts and service manuals, and other descriptions, please contact MTI.*

*Voir «GUIDE TO INDICATOR LIGHTS AND SOUNDS» à la page 29 pour des solutions supplémentaires. Pour plus d'informations sur cet équipement, y compris des schémas de circuits, les manuels de service et pièces, et autres descriptions, s'il vous plaît contacter MTI.*

| # | SYMPTOMS | PROBLEM CAUSE | SOLUTION |
|---|---|---|---|
| 1 | Chair will not function. Hand control lights are off. No green light visible on power supply through back of chair. | Chair power cord is not securely connected. | Verify power cord is securely connected at both ends. |
| | | Facility power or receptacle problem.<br>Facility power circuit breaker problem. | Check facility's power receptacle with a known working device of same voltage specifications. Also check facility circuit breaker to verify it is not tripped if no power to known working device. |
| | | Facility supply voltage is incorrect voltage. | Verify voltage is per specifications on chair serial number/product tag. |
| | | Fuses have blown. | Verify fuses are not burnt. Replace fuse(s) if necessary. See "Fuse Replacement Instructions" on page 25. |
| | | Chair Power Supply is faulty. | Contact Technical Support. |
| 2 | Chair will not function. Hand control lights are off. Green light visible on power supply through back of chair. | Chair is off. | Press the "On" Button on the hand control or unplug the chair for 30 seconds and plug it back in. |
| | | Faulty Hand Control | Test an alternate hand control from similar equipment. Test foot control from similar equipment. |
| | | Faulty Hand Control Jack | Test the same hand control in the 2nd hand/foot control jack. |
| | | Chair PCA isn't functioning correctly. | Contact Technical Support. |
| 3 | Lift, Back, Tilt, or Foot functions will not function. | An actuator is experiencing excessive loads. | Remove or reposition patient, move the chair in opposite direction, then intended direction to continue normal operation. |
| | | An actuator is not functioning or Chair PCA isn't functioning correctly. | Contact Technical Support. |
| 4 | Foot Extension will not extend and beeps. | The footrest is at the safe zone boundary. The footrest is too close to the floor or is too close to vertical. | Change the angle of the footrest. |
| 5 | The chair consistently beeps when retracting the foot section. | The footrest is at the safe zone boundary. The footrest is avoiding colliding with the seat cushion. | This is normal operation. |
| 6 | The chair beeps when pressing Lift Down or Tilt Down and stops moving. | The footrest is too close to the floor. | Press the foot retract or foot up button to move it away from the floor. |

# TROUBLESHOOTING GUIDE

## NOTICE/AVIS

*See "GUIDE TO INDICATOR LIGHTS AND SOUNDS" on page 29 for additional solutions. For more information on this equipment, including circuit diagrams, parts and service manuals, and other descriptions, please contact MTI.*

*Voir «GUIDE TO INDICATOR LIGHTS AND SOUNDS» à la page 29 pour des solutions supplémentaires. Pour plus d'informations sur cet équipement, y compris des schémas de circuits, les manuels de service et pièces, et autres descriptions, s'il vous plaît contacter MTI.*

| # | SYMPTOMS | PROBLEM CAUSE | SOLUTION |
|---|---|---|---|
| 7 | The chair will not function. The green light and orange light are lit on the hand control or Chair PCA. | The Safety Lockout Feature is enabled. | To exit Safety Lockout press **Stop, Stop, Back Down, Stop.** |
| 8 | Swivel will not lock on its own. | The Swivel Button Setting is set to the Swivel Lock/Unlock Setting. | See "Smart Controller™ Technology" on page 14 for instructions to change the Swivel Button Setting. |
| 9 | The chair does not move when a Program Button is pressed. | The Program Button Setting is set to the Maintain Button Setting. | See "Smart Controller™ Technology" on page 14 for instructions to change the Program Button Setting. |
| | | The Program Button does not have a saved location. | See "Controls" on page 16 for instructions on saving a Program Button location. |
| 10 | Home Button does not move the chair to the expected location. | The saved location for the Home Button has been set by another user/ inadvertently. | Move the chair to the desired location. See "Controls" on page 16 for instructions on saving a Home Button location. For further instructions about the operation of the button, see "Smart Controller™ Technology" on page 14. |
| 11 | The chair consistently beeps while moving to a programmed position. | An actuator has gone bad | Contact Technical Support. |
| 12 | Chair will not function or a function is erratic. | Chair PCA isn't functioning correctly. | Contact Technical Support. |
| 13 | Chair PCA relays turn on/off quickly and excessively ("chatters"). | Chair PCA isn't functioning correctly. | Contact Technical Support. |
| 14 | Lift function is slower than usual and only goes up about halfway. Chair beeps while moving. | One of the lifting column motors is not functioning or Chair PCA isn't functioning correctly. | Contact Technical Support. |
| 15 | Swivel will not lock. | Wiring, actuator, and/or chair PCA is not functioning correctly. | Contact Technical Support. |
| 16 | Motor is running after chair stops. | A motor gear has stripped. | Contact Technical Support for motor replacement. |

# GUIDE TO INDICATOR LIGHTS AND SOUNDS

| # | LIGHTS | | | | | | SOUND | STATUS OR CONDITION |
|---|---|---|---|---|---|---|---|---|
| | GREEN | | BLUE | | ORANGE | | | |
| 1 | ● | Solid | ○ | Off | ○ | Off | Start Up Tune | Chair has been plugged in. |
| 2 | ✸ | Slow Flash | ○ | Off | ○ | Off | None | Chair is in hibernation state to conserve power. To exit hibernation press any button. |
| 3 | ● | Solid | ✸ | Rapid Flash | ○ | Off | None | Chair is moving to the Programmed Home or a Program Position or manual button (Lift Up/Down, Tilt Up/Down, Back Up/Down, Foot Up/Down, or Foot In/Out) is being pressed. |
| 4 | ● | Solid | ✸ | Rapid Flash | ✸ | Rapid Flash | None | Chair is moving to the ADA Compliant Home position. |
| 5 | ● | Solid | ○ | Off | ○ | Off | High Beep when a Program Button is pressed | No Program Position is saved. |
| 6 | ● | Solid | ✸ | Flash Twice | ○ | Off | High-Low-High Tune | Program Position or Programmed Home Position has been saved. |
| 7 | ● | Solid | ○ | Off | ✸ | Mod. Flash for 10 sec. | High Beep during motion of specific actuator | Actuator/motor Problem (Contact Technical Support). |
| 8 | ● | Solid | ○ | Off | ✸ | Flash Twice | High Beep | Chair has been moved to a Safe Zone boundary. (ex. Excessive Trendelenburg or Footrest near Seat Cushion or floor). Move in opposite direction to resume full functionality. |
| 9 | ● | Solid | ○ | Off | ✸ | Flash Twice | High Beep | Excessive load on a motor. Remove or shift excess load and move in the opposite direction momentarily to resume. |
| | | | | | | | | Actuator/motor reaches end of stroke prematurely. NOTE: If beeping occurs frequently, contact Technical Support. |
| 10 | ● | Solid | ○ | Off | ✸ | Rapid Flash | None | Swivel has been unlocked. NOTE: On a Non-Swivel model, the orange LED will still flash when the swivel button is pressed. Press any button to turn it off. |
| 11 | ● | Solid | ○ | Off | ● | Solid | 2 High Beeps (upon activation) | Safety Lockout feature is enabled. (To exit press Stop, Stop, Back Down, Stop) Orange LED will flash twice each time button is pressed while Safety Lockout feature is enabled. |
| 12 | ● | Solid | ○ | Off | ✸ | Slow Flash | High Beep with every button press | No actuators respond to motion commands. Chair ID Mismatch (Contact Technical Support). |
| 13 | ✸ | Mod. Flash | ✸ | Mod. Flash | ✸ | Mod. Flash | High Beep with every button press | No actuators respond to motion commands. Chair ID Cable Invalid (Contact Technical Support). |
| 14 | ○ | Off | ○ | Off | ○ | Off | None | Loss of power (chair was unplugged). |
| 15 | ○ | Off | ○ | Off | ○ | Off | Shut Down Tune | Chair has been powered off. Press power button on hand control to resume operation. |

# GUIDE TO INDICATOR LIGHTS AND SOUNDS

| # | LIGHTS | | | | | | SOUND | STATUS OR CONDITION |
|---|---|---|---|---|---|---|---|---|
| | GREEN | | BLUE | | ORANGE | | | |
| 16 | ● | Solid | ✸ | Flash Twice | ✸ | Flash Twice | Low Beep | Stop Button has been pressed for 5 seconds awaiting sequence to enter Smart Controller™ User Program Mode or Calibration Mode. |
| 17 | ● | Solid | ✸ | Flash once | ○ | Off | High Beep | High Beep with each button press until sequence has been entered for Smart Controller™ User Program Mode or Calibration Mode. |
| USER PROGRAM MODE | | | | | | | | |
| 18 | ● | Solid | ● | Solid | ✸ | Slow Flash | Low-High Tune then Low Beep every 10 sec. | Chair has entered Smart Controller™ User Program Mode. Exits automatically after 30 seconds of no activity. |
| 19 | ● | Solid | ○ | Off | ✸ | Slow Flash | High Beep each button press | Button press while in Smart Controller™ User Program Mode. |
| 20 | ● | Solid | ✸ | Flash Twice | ✸ | Slow Flash | High-Low-High Tune | New setting accepted. |
| 21 | ● | Solid | ● | Solid | ✸ | Slow Flash | Three Low Beeps | New setting not accepted. |
| 22 | ● | Solid | ○ | Off | ○ | Off | High-Low Tune | Chair has exited Smart Controller™ User Program Mode. |
| CALIBRATION MODE | | | | | | | | |
| 23 | ○ | Off | ○ | Off | ✸ | Mod. Flash | High Beep when an individual motor button is pressed. | One or more actuators is out of calibration. Do not operate the chair. Contact Technical Support. |
| 22 | ✸ | Slow Flash | ✸ | Slow Flash | ✸ | Slow Flash | Low-High Tune then Low Beep every 10 sec. | Chair is in Calibration Mode. Do not operate the chair. Contact Technical Support. |

# SPECIFICATIONS

| DESCRIPTION | SPECIFICATION |
|---|---|
| Load Capacity[1] | |
| Lift | 725 lb (328.9 kg) |
| Back | 400 lb (181.4 kg) |
| Tilt | 725 lb (328.9 kg) |
| Foot (footrest fully extended) | 150 lb (68 kg) |
| Foot (footrest retracted) | 200 lb (90.7 kg) |
| Weight of Chair[2] | |
| 830 Standard Base | 295 lb (133.8 kg) |
| 830 Swivel Base | 357 lb (161.9 kg) |
| 830 Mobile Base | 288 lb (130.6 kg) |
| 829 Standard Base | 292 lb (132.4 kg) |
| 829 Swivel Base | 355 lb (161 kg) |
| 829 Mobile Base | 285 lb (129.3 kg) |
| Shipping Weight of Chair[3] | |
| 830 Standard Base | 355 lb (161 kg) |
| 830 Swivel Base | 420 lb (190.5 kg) |
| 830 Mobile Base | 351 lb (159.2 kg) |
| 829 Standard Base | 355 lb (161 kg) |
| 829 Swivel Base | 420 lb (190.5 kg) |
| 829 Mobile Base | 351 lb (159.2 kg) |
| Shipping Weight of Upholstery Kit | |
| 830 Seamless/Designer Upholstery Kit | 28 lb (12.7 kg) |
| 830 Plush Upholstery Kit | 31 lb (14.1 kg) |
| 829 Seamless/Designer Upholstery Kit | 25 lb (11.3 kg) |
| 829 Plush Upholstery Kit | 28 lb (12.7 kg) |
| Table Top Range | |
| 830/829 Standard Base | 18.75-39 in (47.6-99 cm) |
| 830/829 Swivel Base and Mobile Base | 18.75-37 in (47.6-94 cm) |
| Back Section Range | 0°± 2.2° (horizontal) to 85°± 2.2° |
| Table Top Tilt Range | 0° ± .6° to 30°± .6° Range is limited when back section is at or lower than 20° below horizontal to avoid collision. |
| Foot Section Range | 0° ± 2.2° (horizontal) to 90°± 2.2° |
| Foot Extension Range | 7 in (17.78 cm) Range is limited depending on Tilt angle, Lift, and footrest angle. |
| Foot Control | IPX6 Rated |
| Hand Control | IPX6 Rated |
| General Dimensions (w/headrest & footrest fully extended | |
| 830 Models | 25 in (63.5 cm) wide x 80 in (203.2 cm) long |
| 829 Models | 22 in (55.9 cm) wide x 80 in (203.2 cm) long |

# SPECIFICATIONS

| DESCRIPTION | SPECIFICATION |
|---|---|
| Power Cord | Plugs: U.S.A. standard 3 prong and IEC 60320-C13 (self-retaining) |
| Electrical Ratings | 100-240VAC (47-63 Hz); 7 Amps |
| Fuse Replacement | (2) 5mm x 20mm 4 Amp 250V Time-Delay Glass Tube Fuse |
| Duty Cycle | Intermittent Operation, 10% Duty Cycle<br>Example: (1) minute on (9) minutes off |
| Classification | Class 1, Type B Applied Part, Ordinary Equipment, Intermittent Operation |
| Listing/Approvals | ETL, IEC 60601-1:2005 Ed.3+A1;C1:2014<br>AAMI ES60601-1:2005+A1<br>CSA C22.2#60601-1:2014 Ed.3<br>IEC 60601-1-2:2014 Ed.4 |

[1]Load Capacity will vary depending on placement and distribution of load on the section of the chair.

[2]Weight may vary due to product variation.

[3]Weight may vary due to variation in weight of shipping materials.

# In-service Checklist for G2 Products with SmartTech™ | **MTI**

| Model Number | Description | Serial Number(s) |
|---|---|---|
| | | |

## The following in-service needs to be performed on this MTI product:

### Set Smart Controller™ Settings

*Enter the User Program Mode in the Smart Controller™ to change how the Program Buttons and the swivel (if applicable) operate. See "Smart Controller™ Technology" on page 14.*

Button Setting ☐ Momentary ☐ Maintained

***[Factory default]*** *Momentary Program Buttons: press and release to automatically move chair to the programmed position.*
*Maintained Program Buttons: press and hold to move chair to the programmed position. Once button is released, chair will stop.*

Swivel Setting (if applicable) ☐ Auto-Lock ☐ Lock/Unlock

***[Factory default]*** *Auto-Lock Swivel: pressing the Swivel Button will unlock the swivel. Swivel will automatically lock after 30 seconds or pressing any button will lock the swivel.*
*Lock/Unlock Swivel: pressing Swivel Button once will unlock the swivel. The swivel will not lock again until any button is pressed.*

☐ Saved Programmable Home

*Save by positioning chair to desired location. If buttons are set to Momentary: press and hold the Home Button for 10 seconds. If buttons are set to Maintained: Press the Stop button twice and then press and hold the Home Button for 10 seconds. Once saved, audible and visual confirmation will be received.*

☐ Saved (4) User Program Buttons (P1-P4)

*Save by positioning chair to desired location, press and hold the desired program button for 5 seconds. Once saved, audible and visual confirmation will be received.*

☐ Reviewed Controls and Operation sections of the User Manual

☐ Reviewed ADA Compliant Home

*ADA Compliant Home position is Lift Down, Tilt Down, Back Up, and Foot Down and Retracted. To access: if buttons are set to Momentary, press and release the Home Button twice (within 1 second). If buttons are set to Maintained, press and hold the Home Button twice (within 1 second).*

☐ Reviewed Safety Lockout

*Locks out all commands once this state has been enabled. To enter, press the following sequence of buttons: Stop, Stop, Back Up, Stop. Once enabled, audible and visual confirmation will be received.*
*To exit, press the following sequence of buttons: Stop, Stop, Back Down, Stop. Once disabled, audible and visual confirmation will be received.*

☐ If you would like to receive occasional emails regarding MTI promotions and product announcements, fill out the sales form at www.mti.net/contact-us.



**MTI, Inc.**
*801-875-4999 • Fax 801-952-0548* • **www.MTI.net**

THIS PAGE IS INTENTIONALLY BLANK

THIS PAGE IS INTENTIONALLY BLANK

Specialized Equipment
for Specialty Healthcare

**Medical Technology Industries**

**MTI, Inc.**
3655 W Ninigret Drive
Salt Lake City, Utah, 84104-6572
800-924-4655 • 801-875-4999 • Fax 801-952-0548
**www.mti.net**

© MTI All rights reserved. MTI reserves the right to make any product changes without notice. The MTI brand and Bear logo design are registered trademarks of MTI, Inc. in the United States.

130-2174 Rev D